Wireless Door Lock Control (RHD)

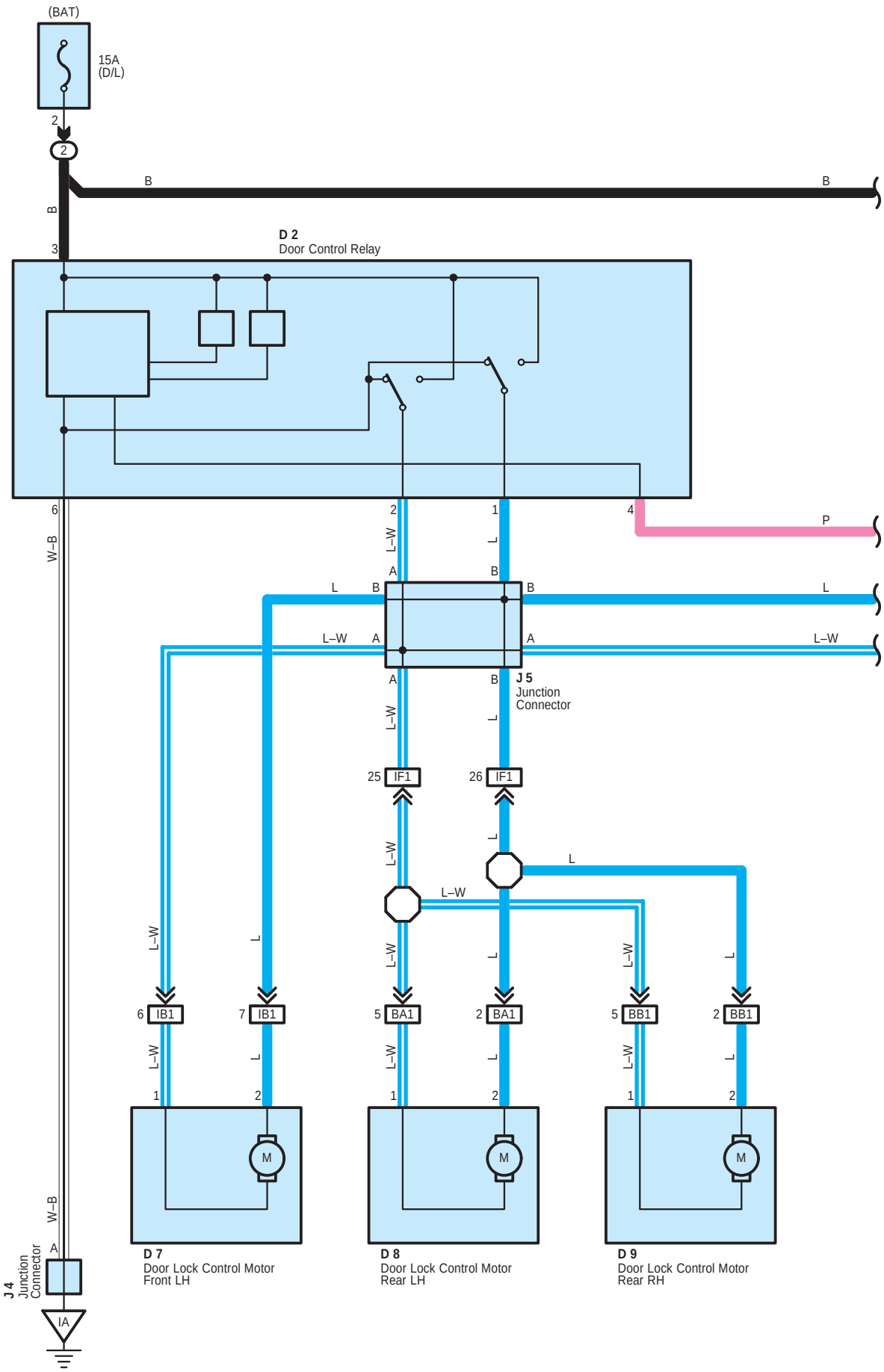

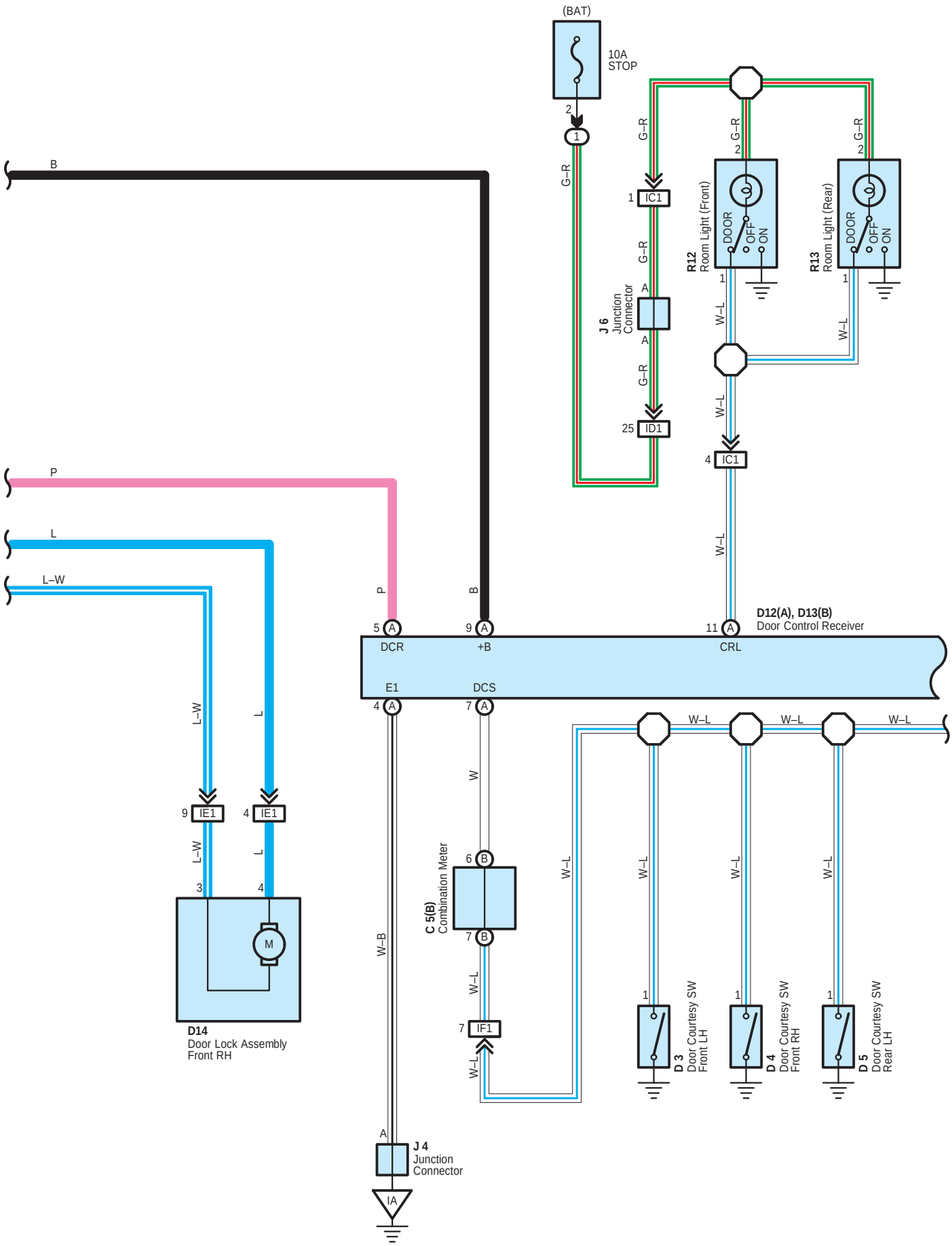
(BAT)
10A
STOP
2
1
G–R
B
1 IC1
G–R
A
J 6
Junction
Connector
A
G–R
25 ID1
R12
Room Light (Front)
DOOR
OFF
ON
R13
Room Light (Rear)
W–L
4 IC1
W–L
P
L
L–W
P
B
5 A
DCR
9 A
+B
11 A
CRL
D12(A), D13(B)
Door Control Receiver
E1
DCS
4 A
7 A
W–L
W–L
W–L
L–W
L
9 IE1
4 IE1
L–W
L
3
4
M
D14
Door Lock Assembly
Front RH
W–B
W
6 B
C 5(B)
Combination Meter
7 B
W–L
7 IF1
W–L
W–L
W–L
W–L
W–L
1
D 3
Door Courtesy SW
Front LH
D 4
Door Courtesy SW
Front RH
D 5
Door Courtesy SW
Rear LH
A
J 4
Junction
Connector
IA

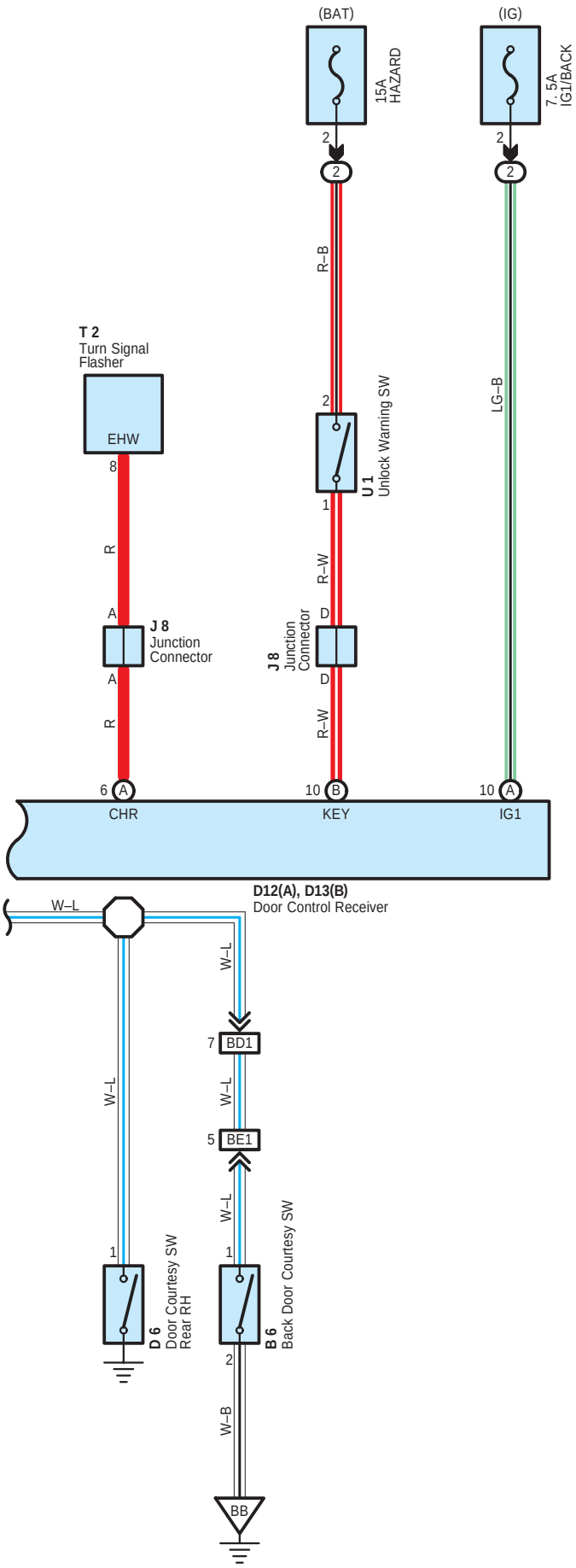
(BAT)
(IG)
15A
HAZARD
7. 5A
IG1/BACK
2
2
2
2
R–B
LG–B
T 2
Turn Signal
Flasher
EHW
8
R
A
J 8
Junction
Connector
A
R
2
U 1
Unlock Warning SW
1
R–W
D
J 8
Junction
Connector
D
R–W
6 A
CHR
10 B
KEY
10 A
IG1
D12(A), D13(B)
Door Control Receiver
W–L
W–L
W–L
7 BD1
W–L
5 BE1
W–L
1
D 6
Door Courtesy SW
Rear RH
1
B 6
Back Door Courtesy SW
2
W–B
BB

System Outline

Door lock control (Lock and unlock) is performed by remote control, without the ignition key inserted in the door key cylinder, using low–power electrical waves emitted by a transmitter.

1. Central Door Lock Control

Output door lock/unlock signal in conjuction with the door knob switch.

2. Room Lamp Control

Turn on/off room lamps when the doors are opened/closed.

3. Wireless Entry Control

Output door lock/unlock signal when door lock/unlock code from the transmitter is received.
Hazard lamps blink and room lamps turn on as answer back.

: Parts Location

Code	See Page	Code	See Page	Code	See Page
B6	40 (RHD)	D7	40 (RHD)	J5	37 (*5)
C5 B	36 (*5)	D8	40 (RHD)	J6	37 (*5)
D2	36 (*5)	D9	40 (RHD)	J8	37 (*5)
D3	40 (RHD)	D12 A	36 (*5)	R12	41 (RHD)
D4	40 (RHD)	D13 B	36 (*5)	R13	41 (RHD)
D5	40 (RHD)	D14	40 (RHD)	T2	37 (*5)
D6	40 (RHD)	J4	37 (*5)	U1	37 (*5)

: Relay Blocks

Code	See Page	Relay Blocks (Relay Block Location)
1	22	Engine Room R/B (Engine Compartment Right)
2	23 (RHD)	Fuse Block (Right Kick Panel)

: Connector Joining Wire Harness and Wire Harness

Code	See Page	Joining Wire Harness and Wire Harness (Connector Location)
IB1	48 (*5)	Front Door LH Wire and Instrument Panel Wire (Left Kick Panel)
IC1	48 (*5)	Instrument Panel Wire and Roof Wire (Cowl Side Panel RH)
ID1	48 (*5)	Engine Room Main Wire and Instrument Panel Wire (Cowl Side Panel RH)
IE1	48 (*5)	Front Door RH Wire and Instrument Panel Wire (Right Kick Panel)
IF1	48 (*5)	Instrument Panel Wire and Floor Wire (Right Kick Panel)
BA1	50 (RHD)	Rear Door No.1 Wire LH and Floor Wire (Center Pillar LH)
BB1	50 (RHD)	Rear Door No.1 Wire RH and Floor Wire (Center Pillar RH)
BD1	50 (RHD)	Back Door No.2 Wire and Floor Wire (Rear Quarter Panel RH)
BE1	50 (RHD)	Back Door No.2 Wire and Back Door No.1 Wire (Right Side of Back Door)

: Ground Points

Code	See Page	Ground Points Location
IA	48 (*5)	Left Kick Panel
BB	50 (RHD)	Right Side of Back Door

* 1 : LHD 3SZ–VE * 2 : LHD K3–VE * 3 : RHD 3SZ–VE * 4 : RHD K3–VE * 5 : RHD w/ Heater * 6 : RHD w/o Heater